GRAND CENTRAL WITH METAL LEVER HANDLES

U9L-5401BEH

Trim for thermostatic mixer with 2 valves item to be installed horizontal . to adapt on 5 401AHC or 5 401AHM

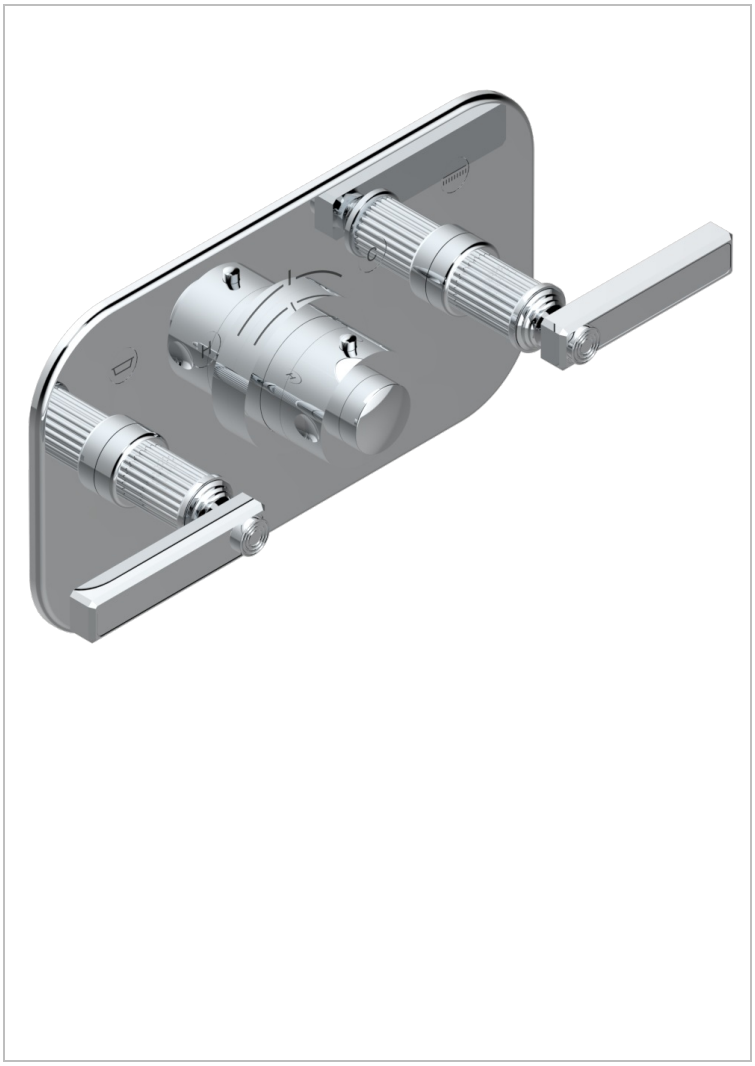

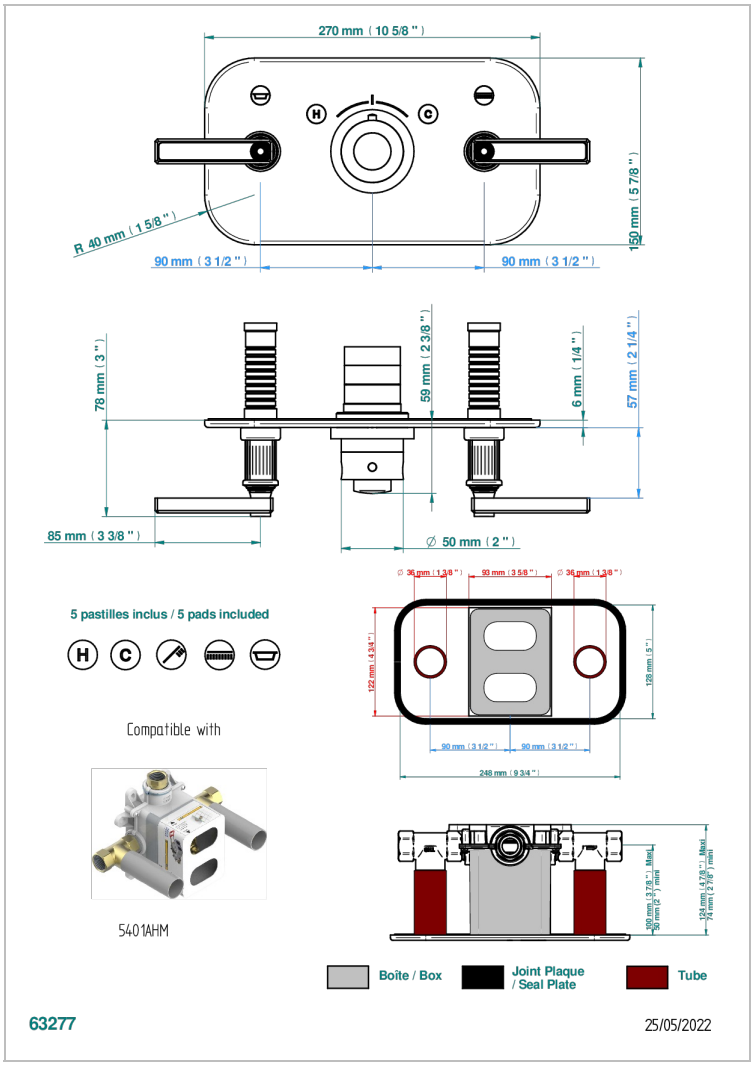

CHARACTERISTIC

- Grand central with metal lever handles
- Trim for thermostatic mixer with 2 valves item to be installed horizontal . to adapt on 5 401AHC or 5 401AHM

RELATED SKU'S

- Ref. G00-5401AHC 3/4" THG thermostat, 60 l/mn with two valves with wax cartridge delivered with a built-in box, without trim - to be installed horizontal (for installation with cross handle)
- Ref. G00-5401AHM 3/4" THG thermostat, 60 l/mn with two valves with wax cartridge delivered with a built-in box, without trim - to be installed horizontal (for installation with lever handle)

AVAILABLE FINITIONS

Antique nickel - H28
Blush PVD - H62
Brass color PVD - H49
Brown bronze color PVD - F33
Gold color PVD - H52
Graphite PVD - H64
Lacquered antique silver (coated) - H03
Lacquered light bronze - D01
Matt Umber PVD - H67
Matt blush PVD - H60
Matt brass color PVD - H50
Matt brown bronze color PVD - F34
Matt chrome - C02
Matt gold - F07
Matt gold color PVD - H53
Matt graphite PVD - H65
Matt nickel (color finish) - C01
Matt nickel color PVD - H56
Nickel color PVD - H55
Polished chrome (color finish) - A02
Polished chrome with gold inlay - GA1
Polished gold (color finish) - F01
Polished nickel - B01
Soft gold - F30
Soft matt gold - F31
Umber PVD - H66
Varnished matt antique red copper (color finish) - H07